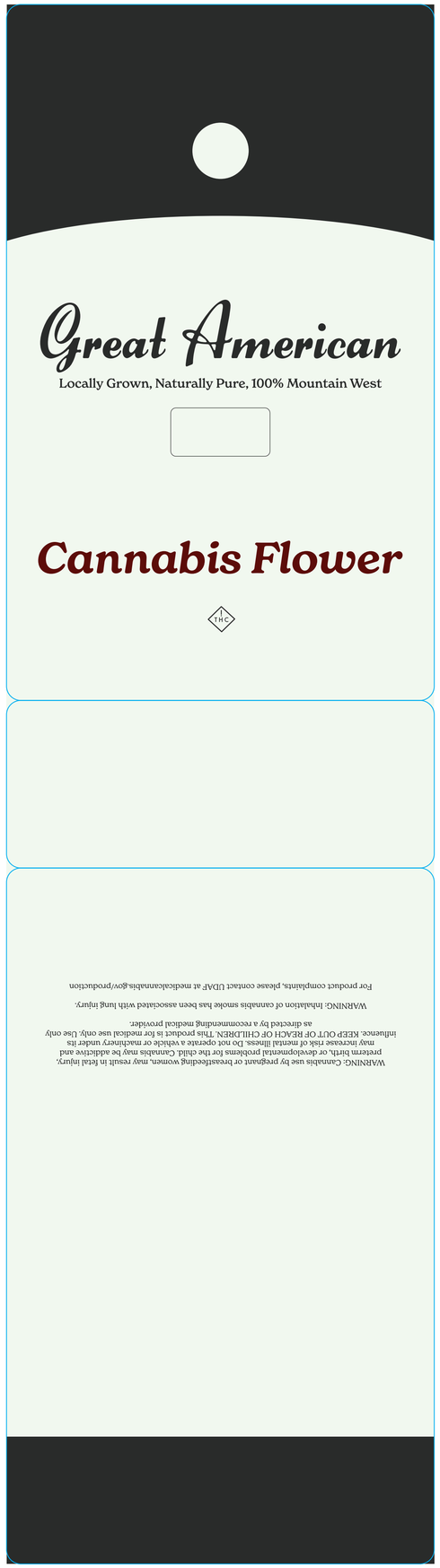

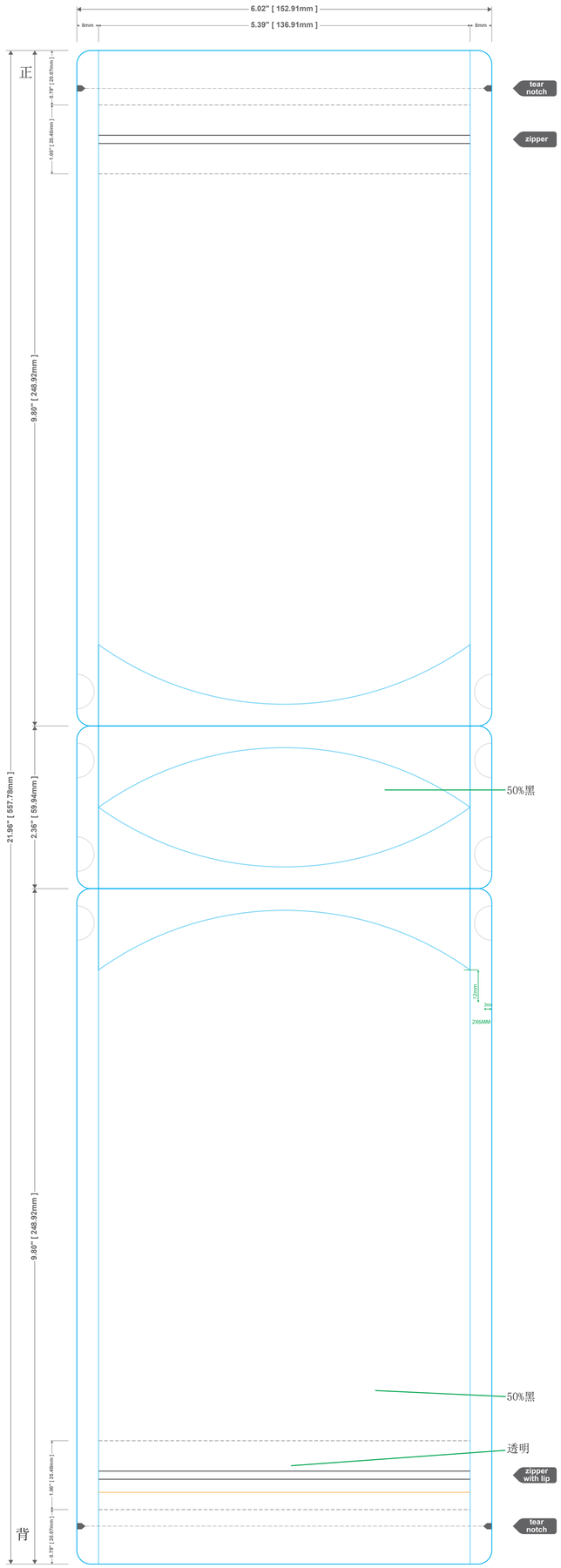

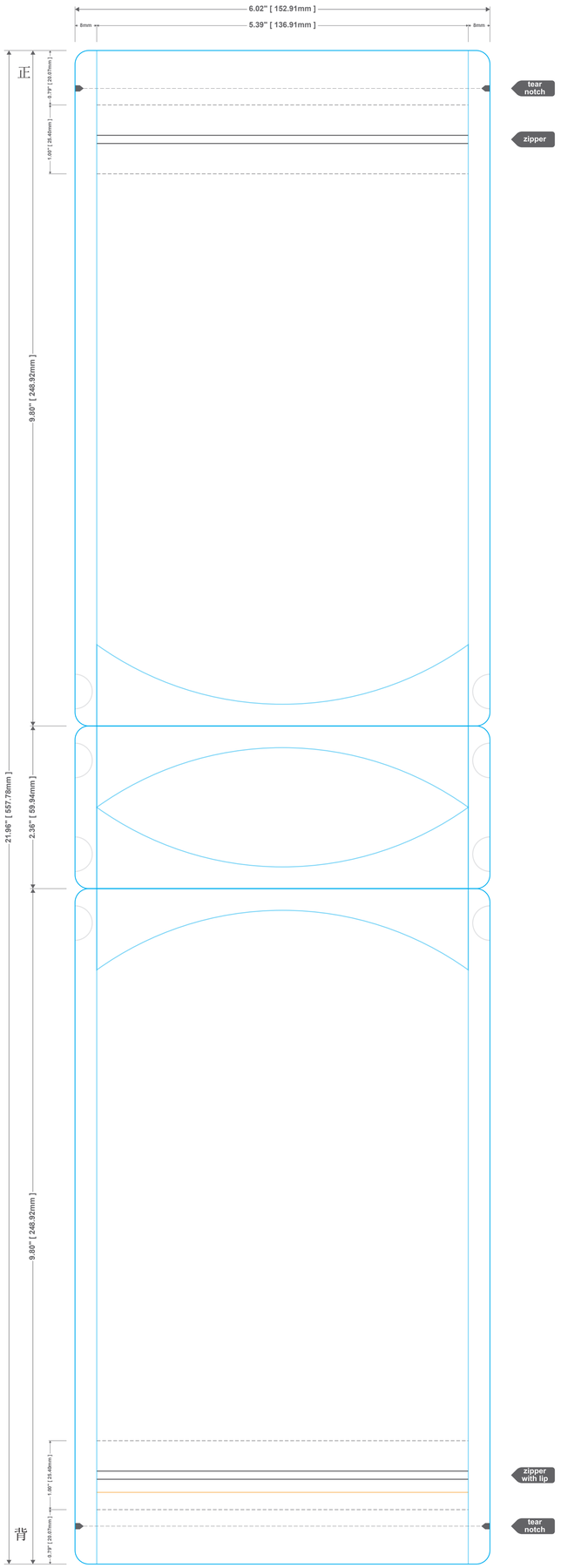

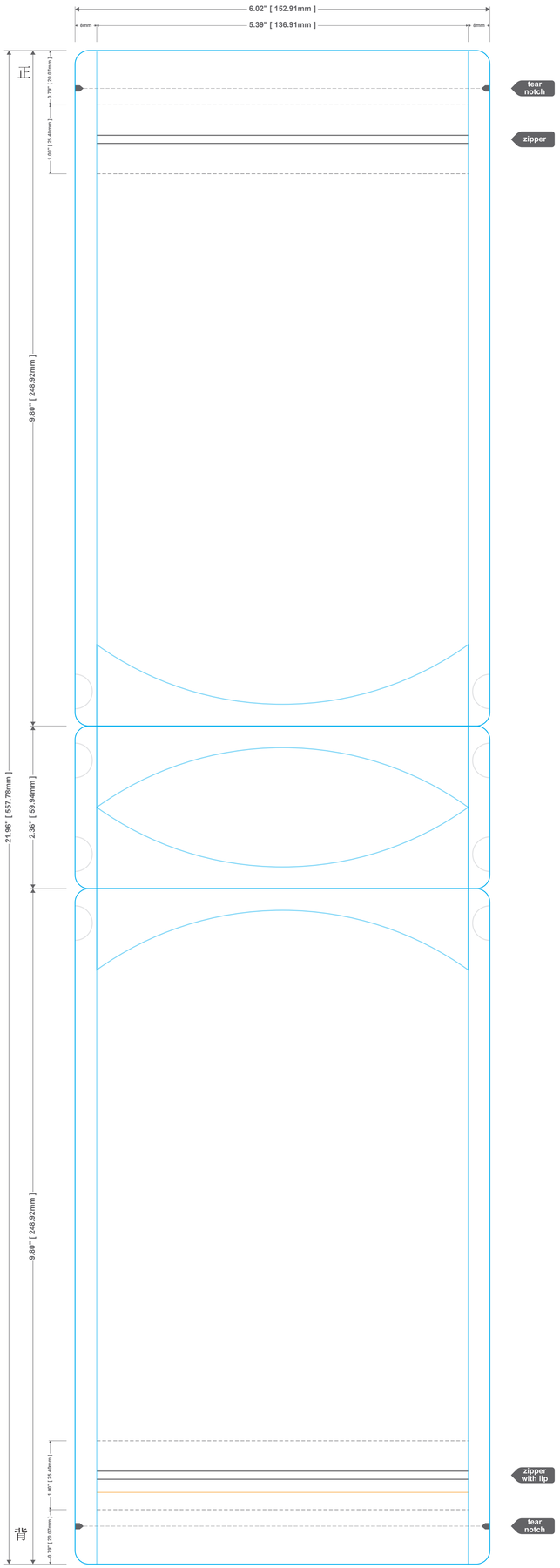

WARNING: Cannabis use by pregnant or breastfeeding women, may result in fetal injury, preterm birth, or developmental problems for the child. Cannabis may be addictive and may increase risk of mental illness. Do not operate a vehicle or machinery under its influence. KEEP OUT OF REACH OF CHILDREN. This product is for medical use only. Use only as directed by a recommending medical provider.

WARNING: Inhalation of cannabis smoke has been associated with lung injury.

For product complaints, please contact UDAF at medicalcannabis.gov/production

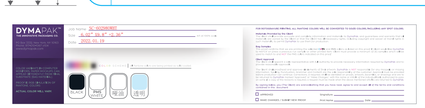

亮光 哑油

白版